Development of Networked Small Unmanned Surface Vehicles for In-Situ Ocean Weather Research

Yih-Ru Huang, Hernan Suarez, Sudantha Perera, Ramesh Nepal, Jakob Fusselman, Matthew Gilliam, Mansur Tyler, Rockee Zhang,

Intelligent Aerospace Radio Team
School of Electrical and Computer Engineering

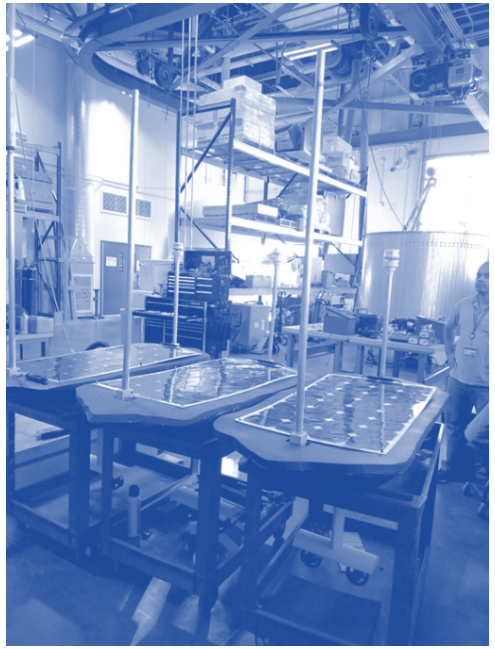

Background of USV

Automatic Buoy systems

USV and UUVs

Surface vehicle
Vs
submarine
Vehicle

Different power sources,
Voyage duration and
Payload capabilities

Just like UAS, applications
Range from
Ocean survey, weather
Measuring to
Long range surveillances

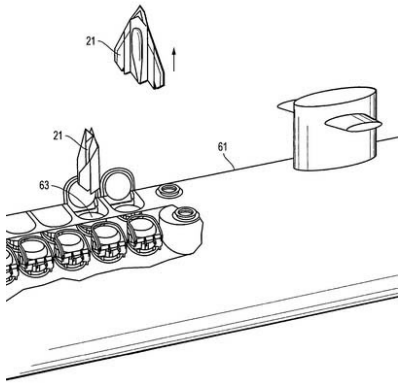

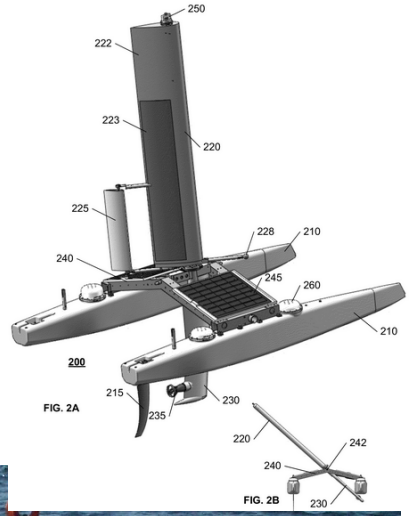

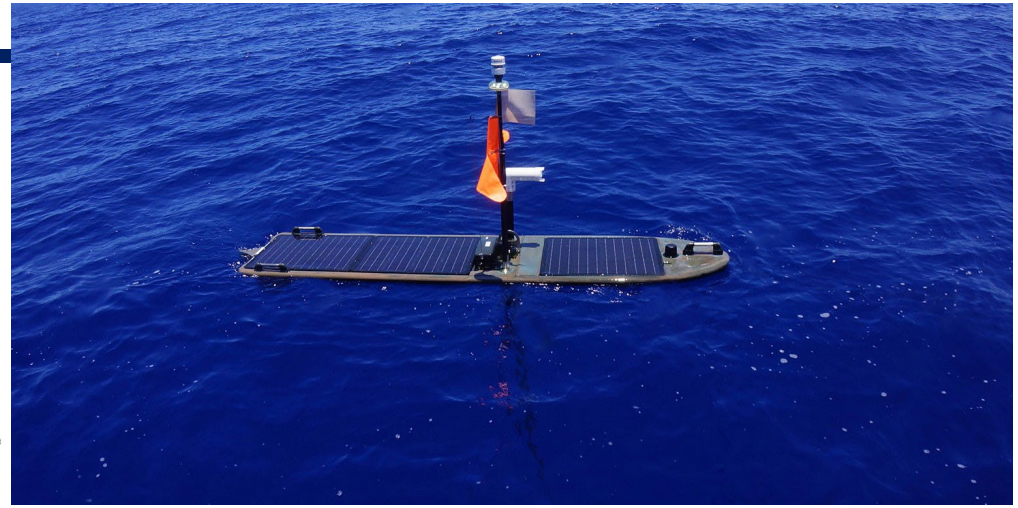

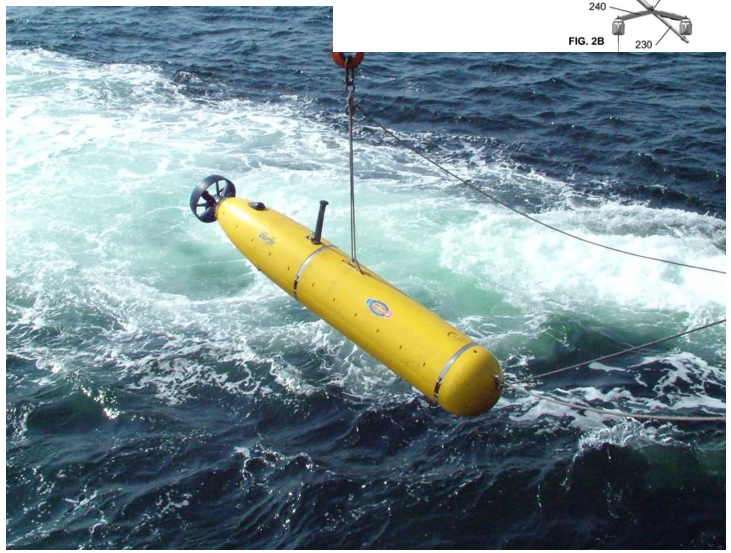

IART
INTELLLIGENT AEROSPACE RADIO TEAM

Motivation for Small, low-cost And Networked USVs for Ocean Weather Data Collection

Near-surface weather probe data is important for ocean weather forecast modeling and monitoring of events such as hurricane and typhoon, usually, collected through NOAA's existing buoy systems.

However, buoy systems are sparse, expensive, and hard to maintain. Similar issues exist for satellite remote sensing data.

The idea is deploying a large amount of small, low cost USVs with good spatial densities (e.g., < 20 km grid) and time resolution (< 1 hr network update), capable of autonomous navigation and energy harvesting, and inter-connected together through data network (sensor networking).

IART
INTELLLIGENT AEROSPACE RADIO TEAM

Challenges

- Survivability and endurance of small USV in Ocean Environments
- Power and energy sustainability
- Communications: Satellite vs LOS
- In-situ Measurement data quality, resolution
- Scalability of USV network
- Maintainability: Loss, damage, retrieval

IART
INTELLLIGENT AEROSPACE RADIO TEAM

Development Roadmap

2015

ARK1

Single small USV

2017-18

ARK2-4

Small Network (up to 4 boats)

2018- Future

DOV1

"Distributed Ocean Vehicle"
Possible radar sensors

IART
INTELLLIGENT AEROSPACE RADIO TEAM

Data Collection and Report System

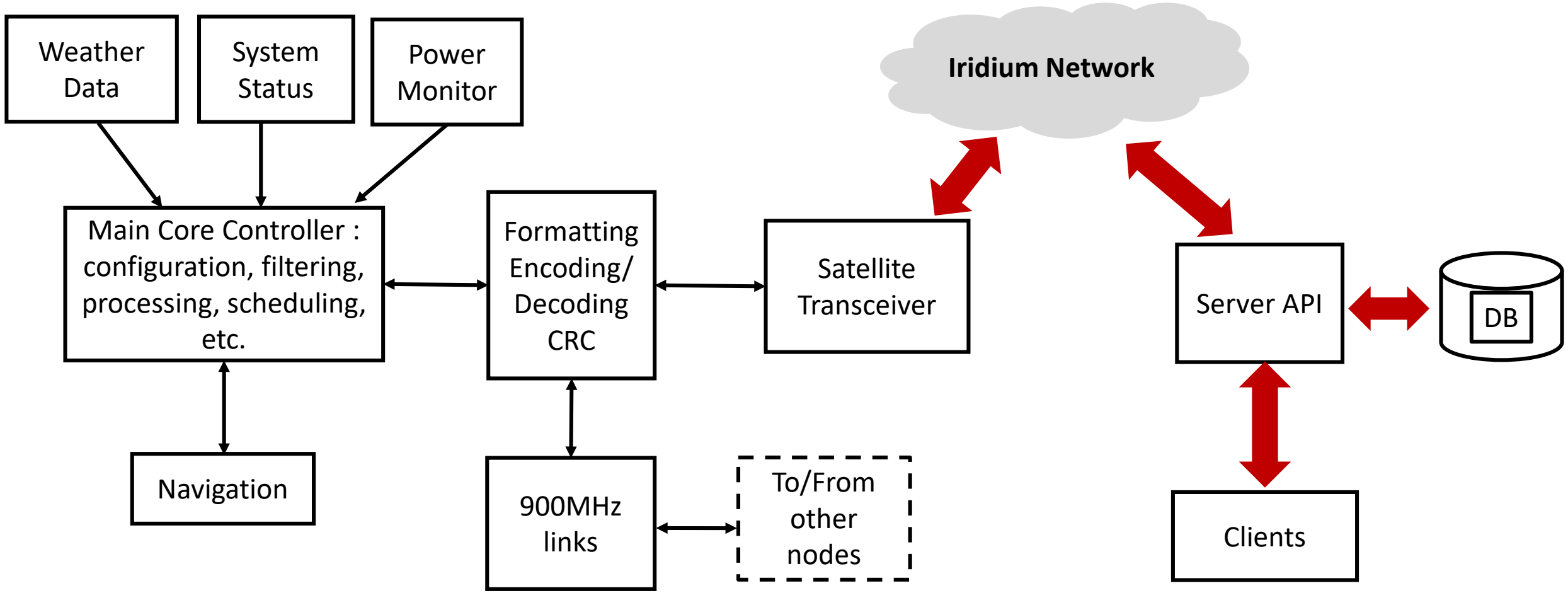

IART
INTELLLIGENT AEROSPACE RADIO TEAM

Evolution of the ARK Platform

Version 1:
Using bait boat structure, flexible solar panel and small 12V motor propulsion

Version 2:
Using foam board and customized mechanical structure system, using *Blue Robotics* thrusters

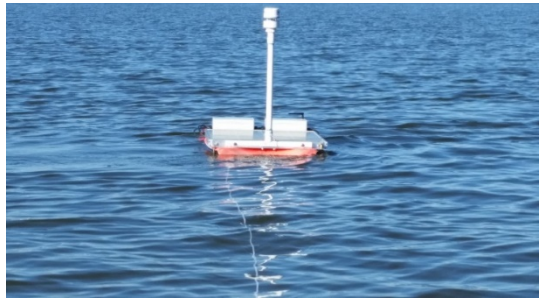

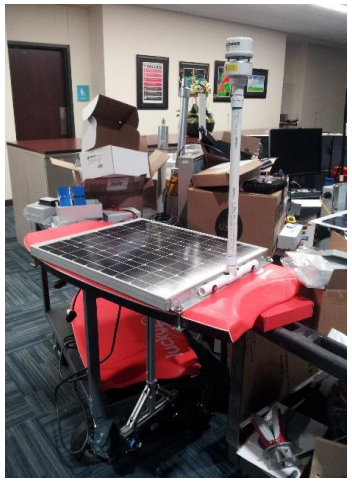

Version 3-4: improved ocean endurance
Using EVA foam exterior material
915 MHz radio, full auto-navigation

OU-ARK V4 Platform Parameters

System Parameters	Values
USV size and weight	47 inch length, 24 inch width, < 7 inch height
Payload	Entire system < 80 lbs, including the solar panels, weather sensors, GPS and all electronics
System power consumption	65 watt at peak speed
USV cruising speed	0.5 – 4 knots (In this deployment we only anchor in fixed location)
Weather sensors	Humidity, temperature, wind speed/direction, pressure
Total system weight	Total system < 80 lbs
Networking protocol	900 MHz radio and satellite radio
Sampling rate	Single node 1 sample/sec of in-situ surface weather data
Network sizes	NA for this deployment
Data rate	>100 kbps within 20 km range of reception
Durability	Verified to about one week in Ocean potentially up to 3 months
Ocean worthiness	Beaufort Scale 4
Autonomous navigation	GPS + Magnetic Compass + PID control Automatic mode switching depending on energy levels
Cost	$3000 material and electronics

IART
INTELLLIGENT AEROSPACE RADIO TEAM

ARK-V4 Shaping and Ocean Dynamics

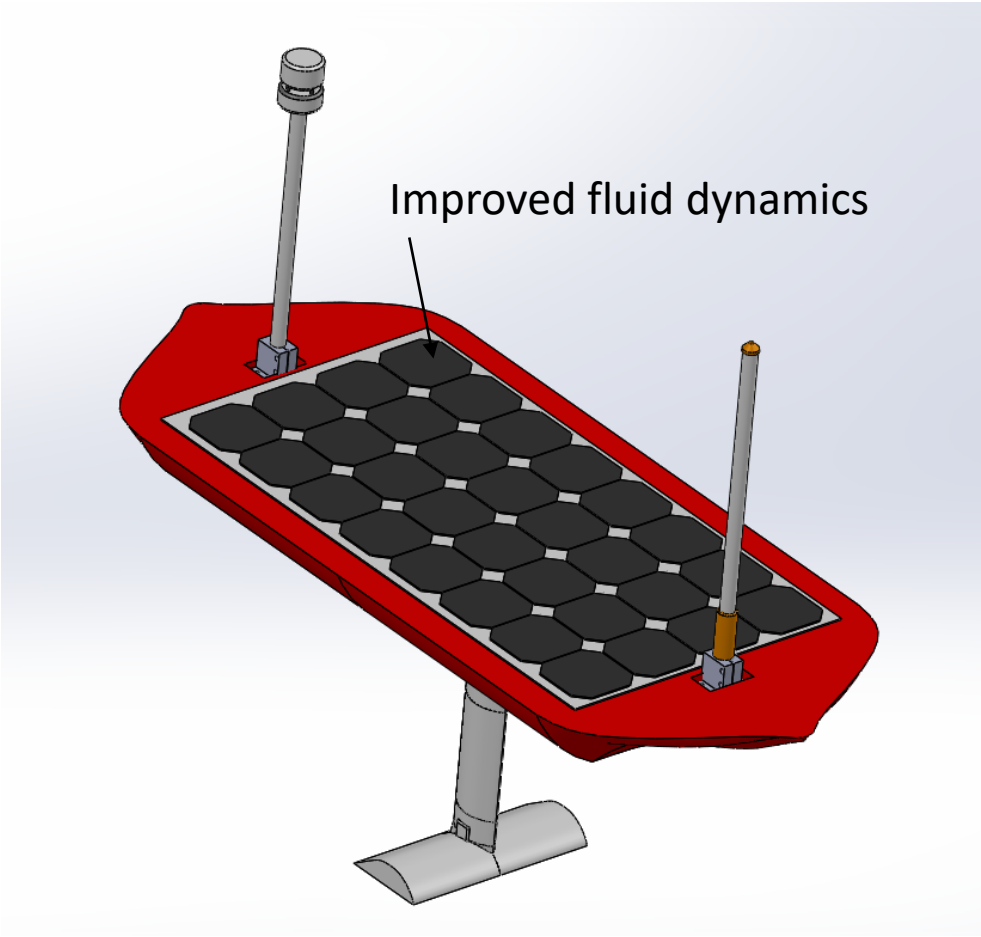

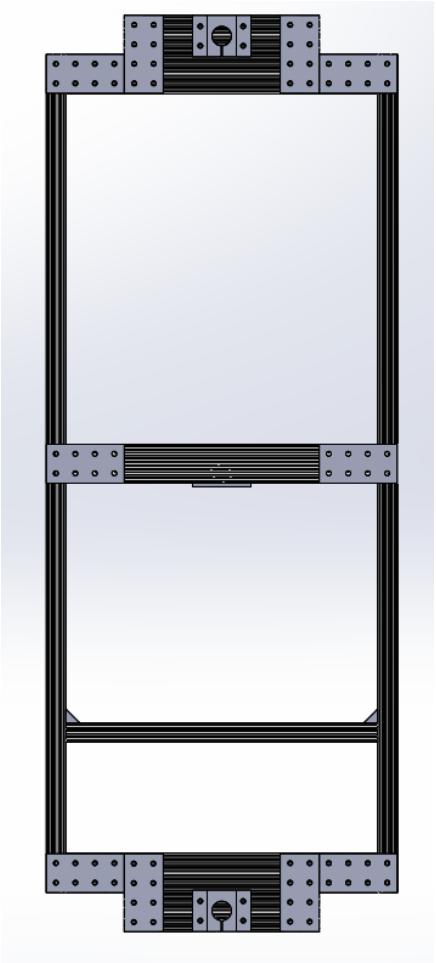

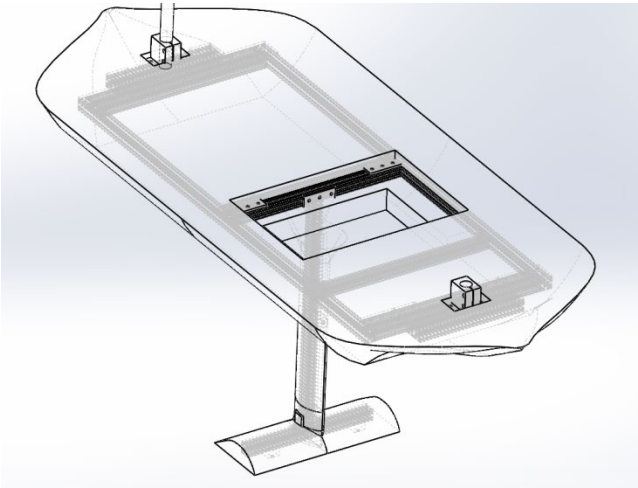

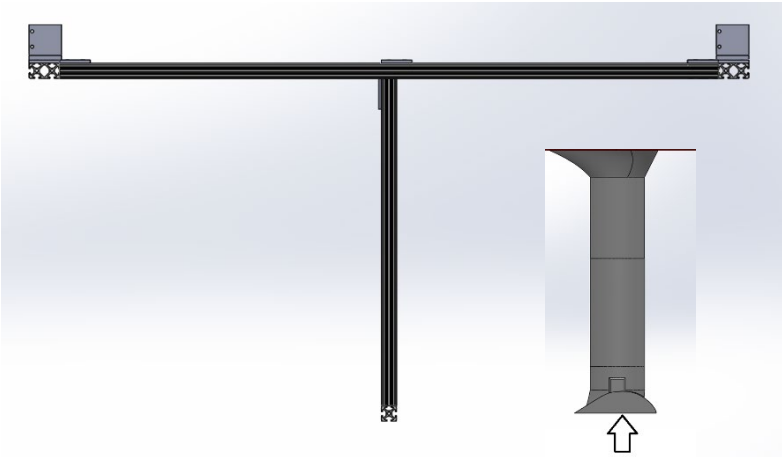

IART
INTELLLIGENT AEROSPACE RADIO TEAM

Test of Radio (900 MHz Mesh Network)

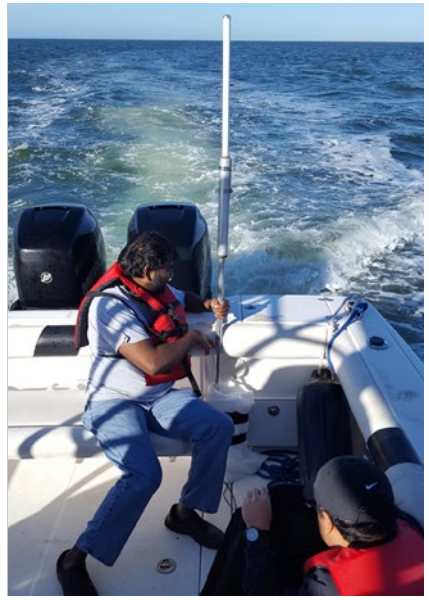

Frequency Range	902 to 928 MHz
RF Data Rate	9.3 kbps to 3.2MHz
Tx Power	Up to 30dBm
Range	Line of Sight 100 Miles
Rx sensitivity	9.4 kbps@-120 dBm; 3.2MHz@-98dBm
Modulation	Chirp Spread Spectrum
RX Current	295 mA @ 5VDC
TX Current	1.58A @ 5VDC

The radio range test validates the LOS communication range over the Ocean surface with certain antenna height used by USV

Test of Radio (900 MHz Mesh Network)

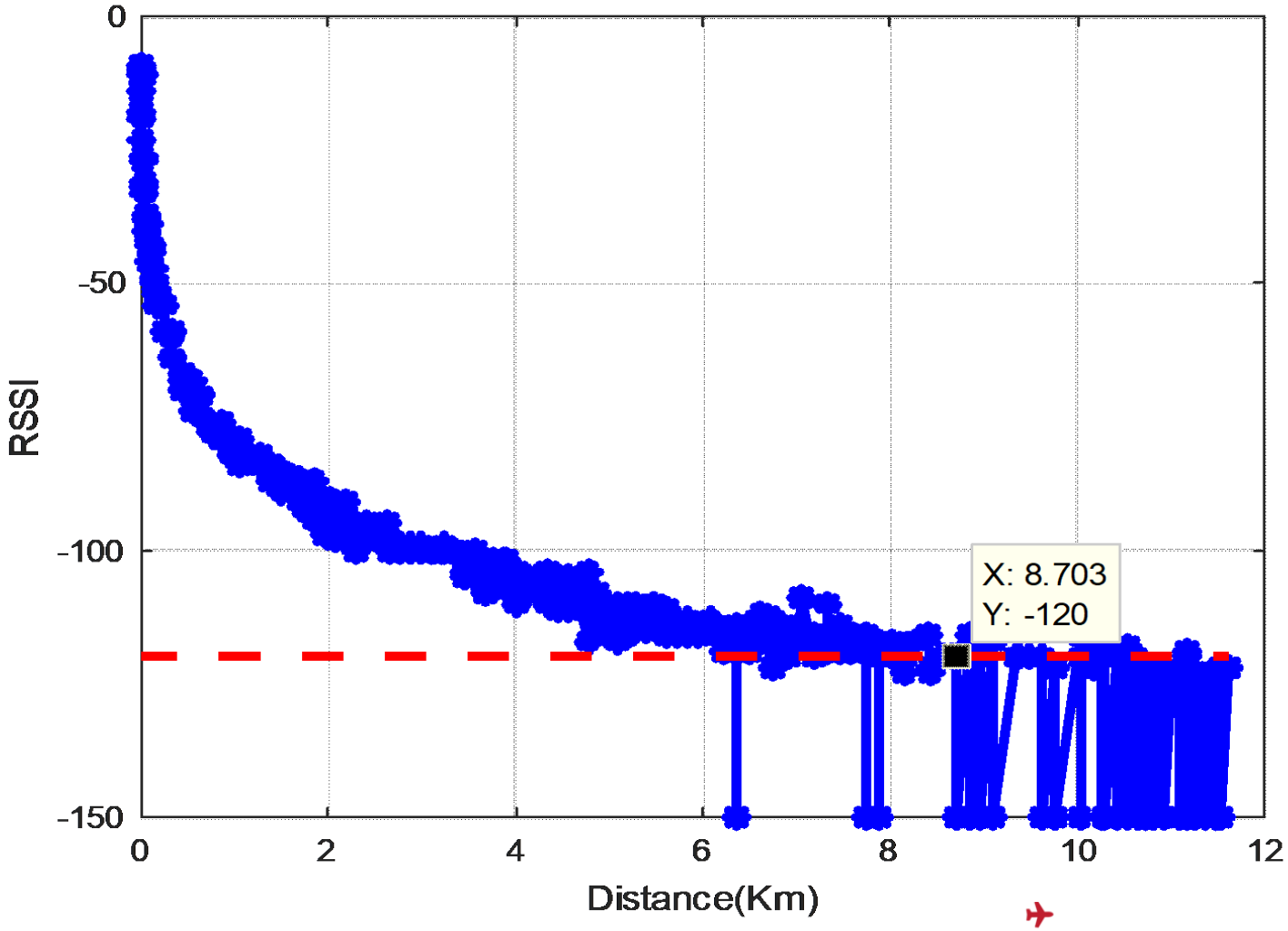

With about 1.5 m antenna height for TX and RX, the ARK radios can reach near to 8 km effective communication range across actual ocean water,

taller antenna can extend the Radio operational range

IART
INTELLLIGENT AEROSPACE RADIO TEAM

Test of Propulsion System

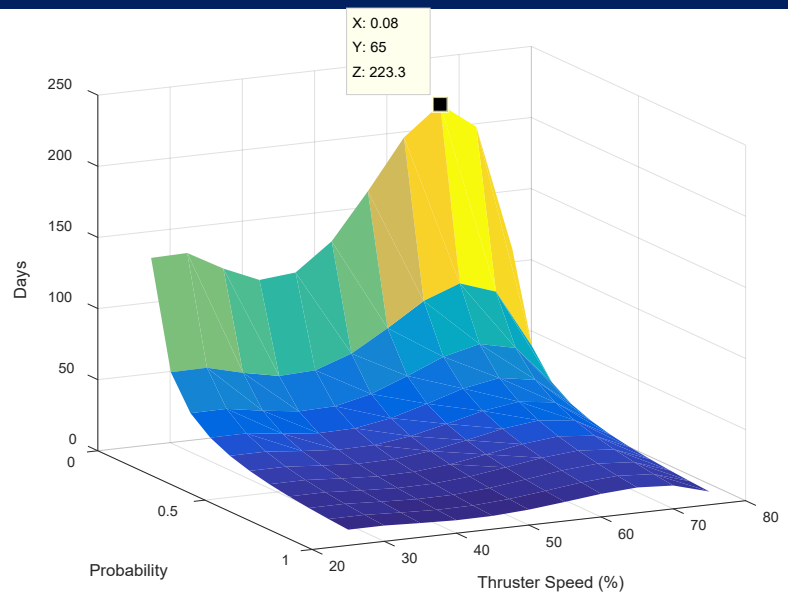

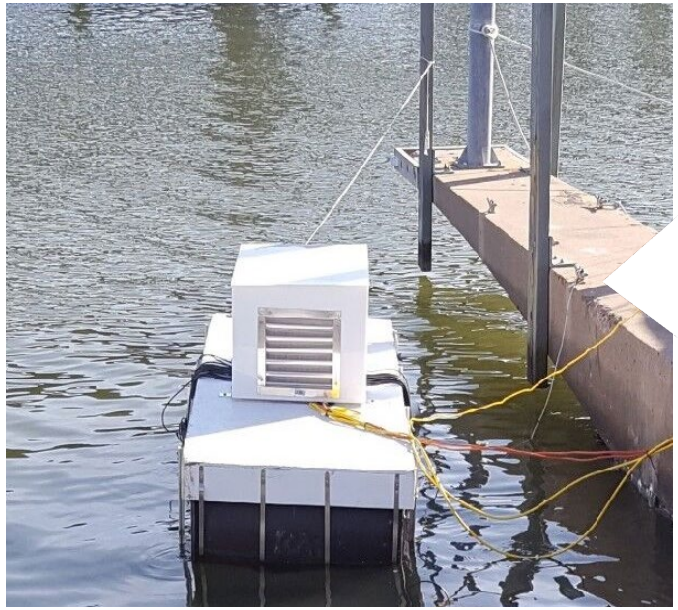

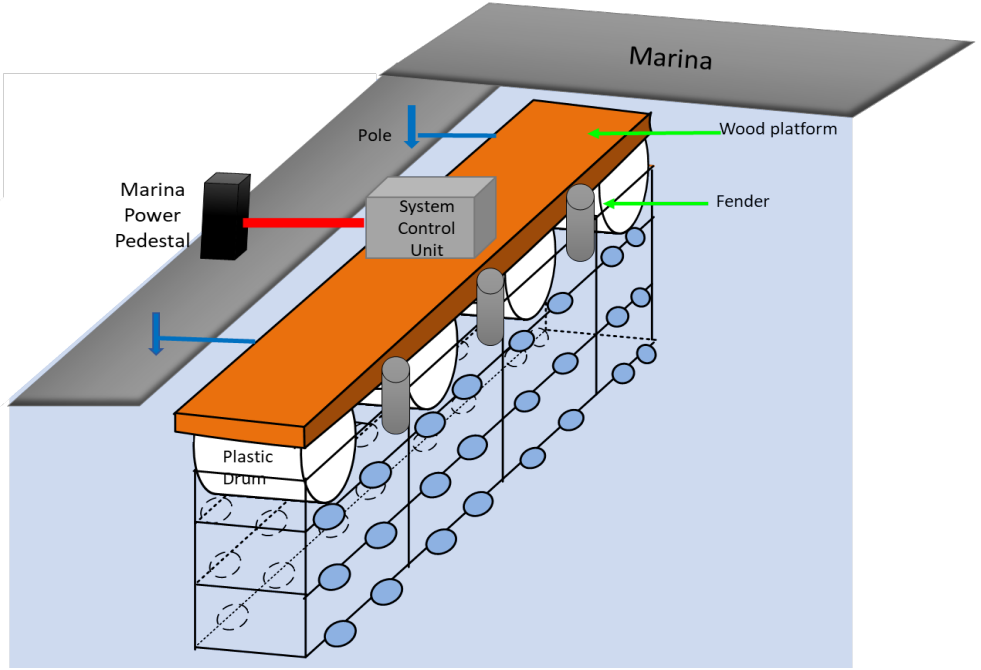

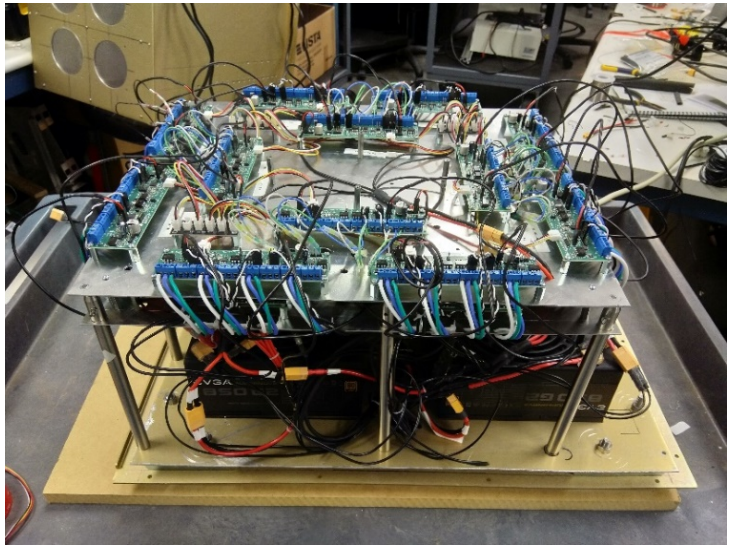

The idea is running a group (48) of thrusters in ocean water and evaluate the durability of them over time

IART
INTELLLIGENT AEROSPACE RADIO TEAM

Self-Navigation Lake Tests

ARK 2 performed waypoints and position hold tests

Navigation mode waypoints

Holding position mode

The problem was when the power was low the unit was drifted to the side of the lake

IART
INTELLIGENT AEROSPACE RADIO TEAM

Ocean Data Collections

Stationary Data Collection

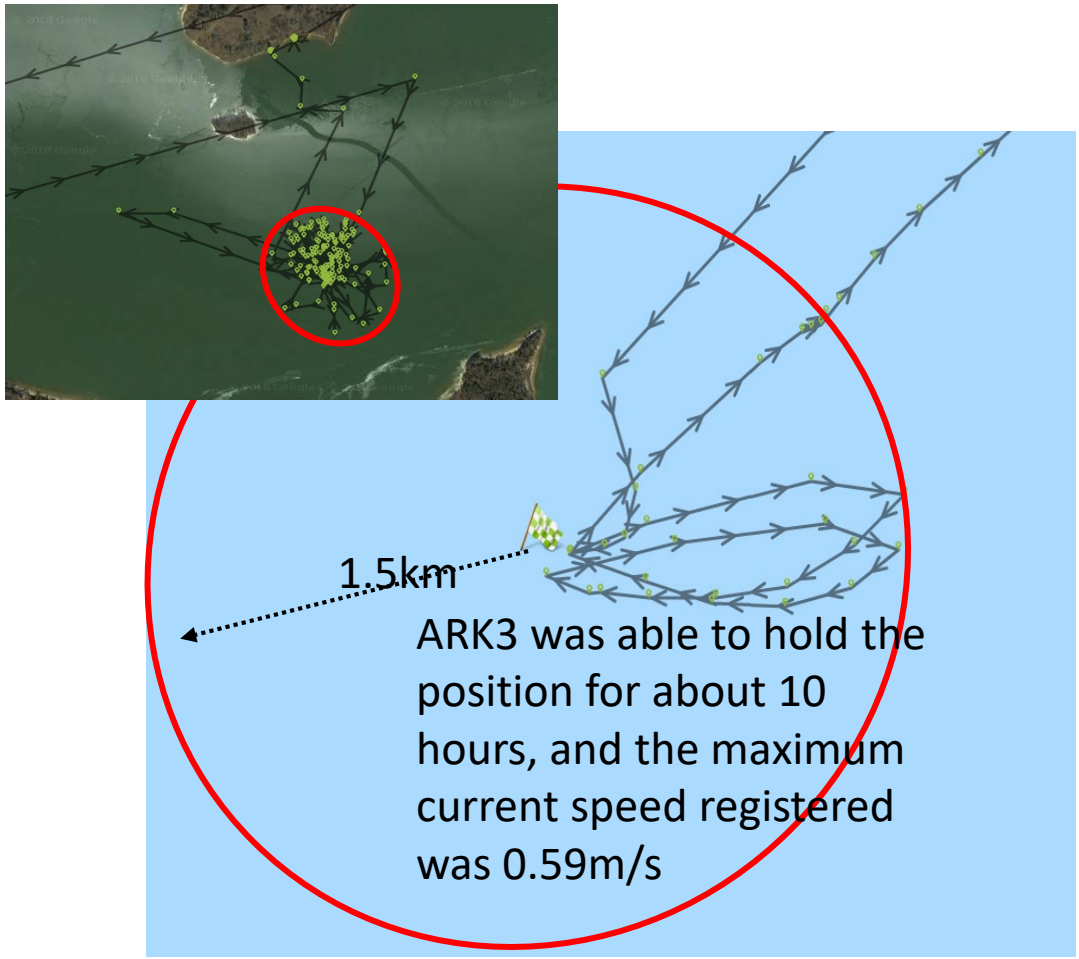

ARK3 was able to hold the position for about 10 hours, and the maximum current speed registered was 0.59m/s

Dynamic Data Collection

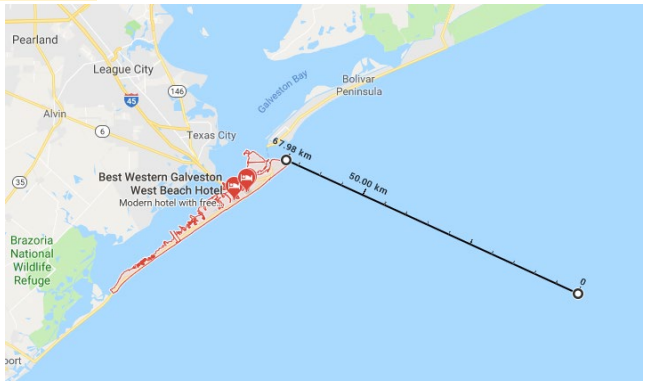

Example of ARK3 deployment on 06/22/18 15:33 (UTC)

IART
INTELLLIGENT AEROSPACE RADIO TEAM

Weather Data Collections

Water Temperature(°C), Air Temperature(°C)

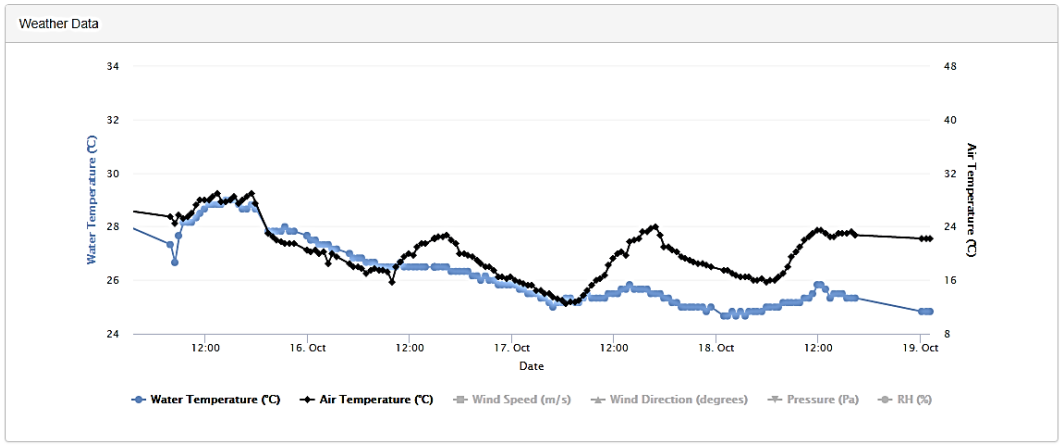

Wind Speed(m/s), Wind Direction(°)

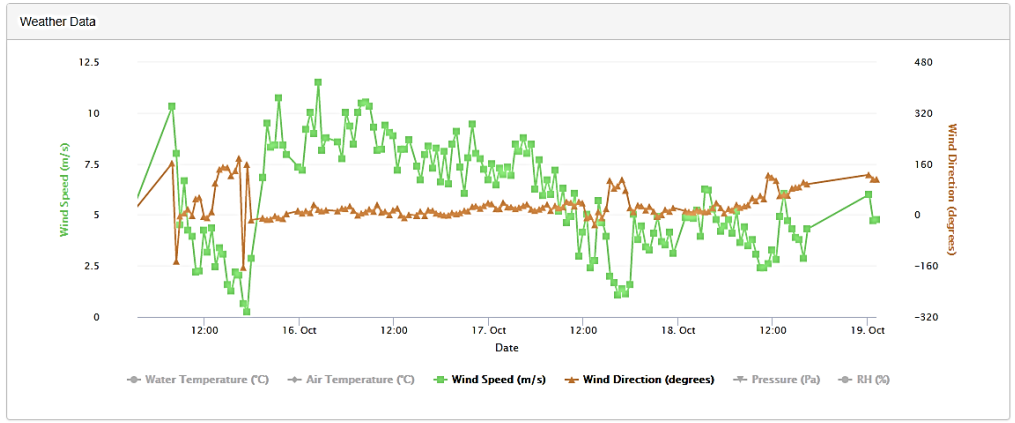

Pressure(Pa)

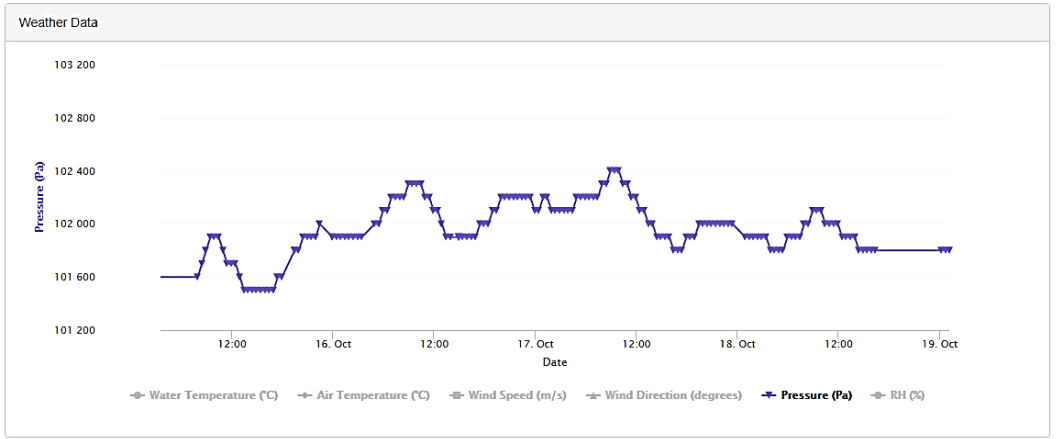

Relative Humidity (%)

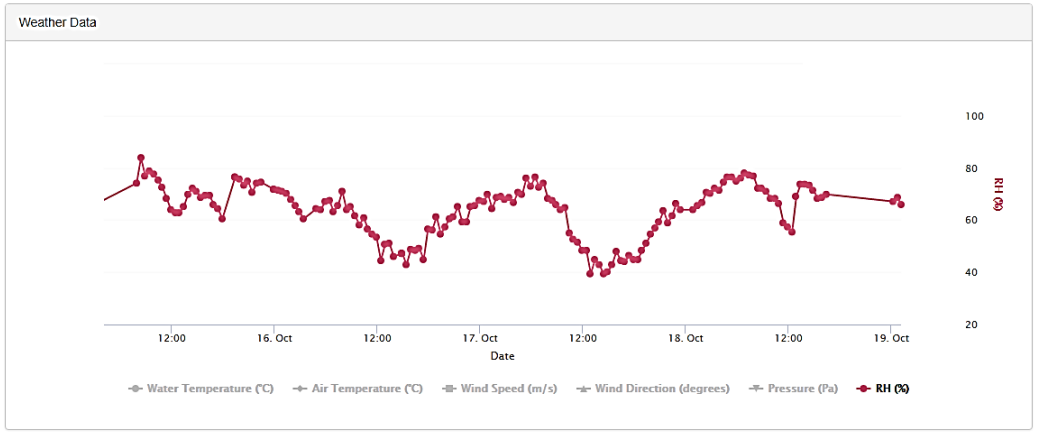

IART
INTELLLIGENT AEROSPACE RADIO TEAM

Sea Condition Data Collections

Wave Height (m), Surface Roughness(°), Current Direction(°), Current Speed (m/s)

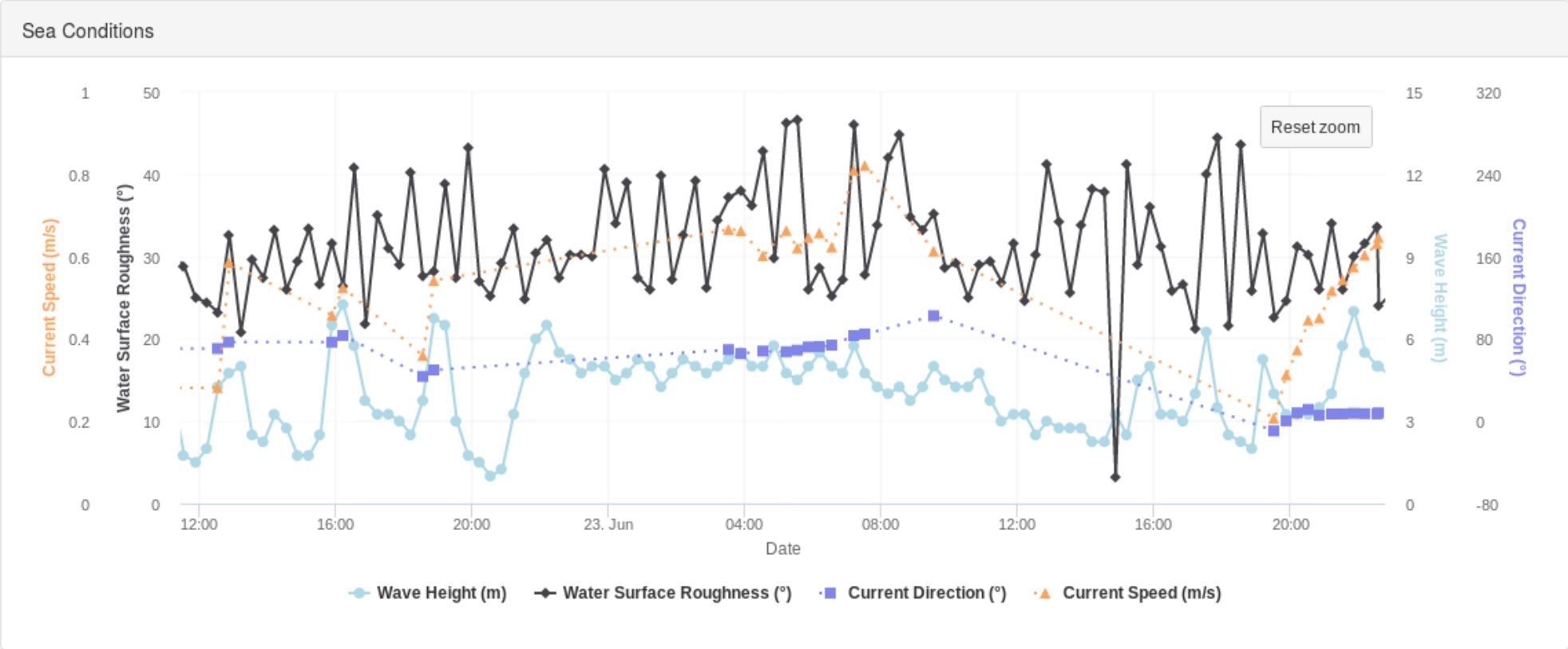

Web client location at: http://muron3.s3-website.us-east-2.amazonaws.com

Validation and Verification of Surface In-Situ Data

Compared observations such as relative humidity (%), atmospheric pressure (kPa), water temperature (C), air temperature (C), wind direction (Deg), wind speed (m/s), wave height (m), and altitude(m).

ARK measurements

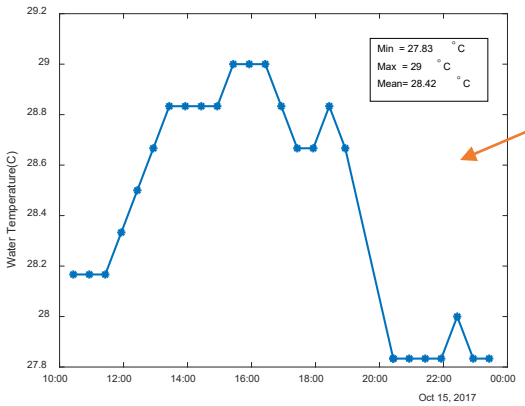

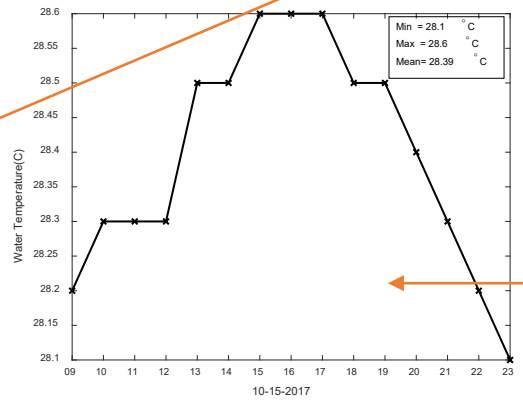

NOAA Buoy measurements

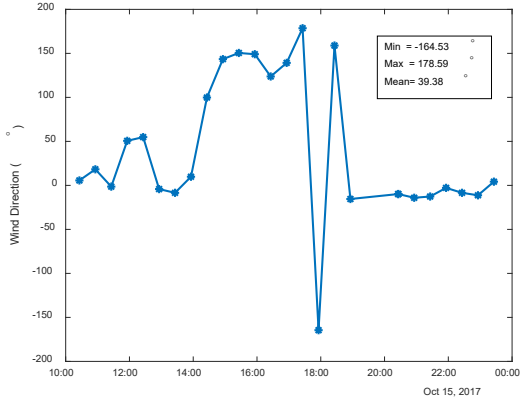

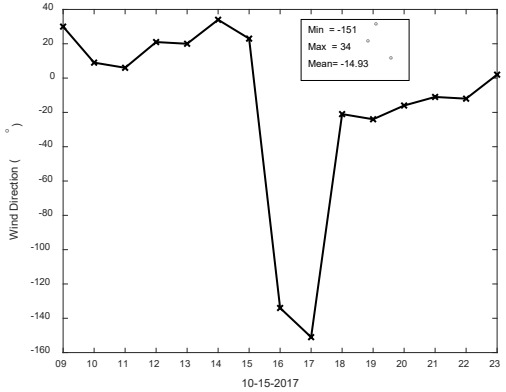

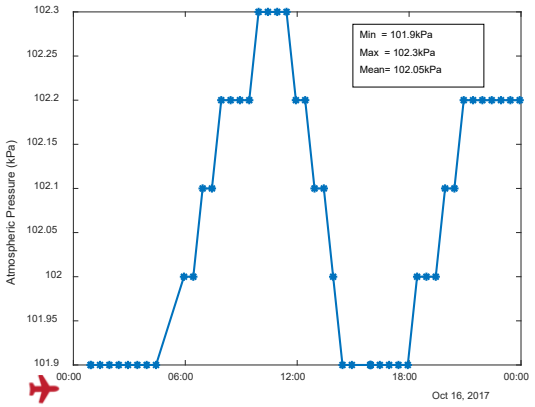

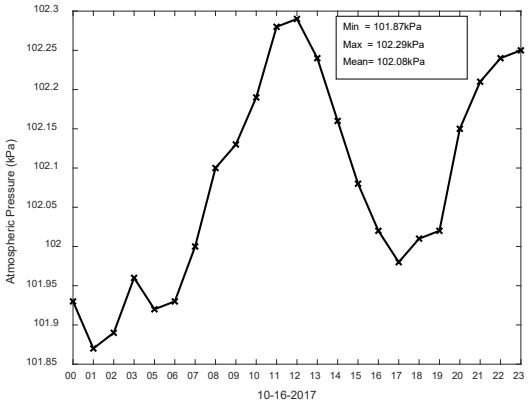

IART
INTELLIGENT AEROSPACE RADIO TEAM

Summary: Future of USV for Weather Research

Possible commercialization path and collaboration with Boeing/Liquid Robotics

Navy/AF/NOAA

Collaboration with TAMU;
Working with University of Guam and Hawaii;
Working with UC-San Diego

Improvement of Data Center and Demonstration of DA Cases

IART
INTELLLIGENT AEROSPACE RADIO TEAM